Walpar, LLC
4200 Jefferson Ave. SW
Birmingham, AL 35221
Phone: 205-925-4990
Fax: 205-925-7273

Date: 12/13/2024

Transmittal #: 00038

Job #: 3546
P039718,Carolina Crossroads Ph 1
Customer PO #: 221089P0025-002/001/LOI Dated 4/5/23

To: Archer-United Joint Venture
1021 Briargate Circle
Columbia, SC 29210

Attention: Anderson Bowers

Sent Via: E-mail

We are sending you enclosed, the following:

Engineer Letter
Revised Calculations
Revised Design Drawings
Revised Erection Drawings
Revised Foundation Drawings
Shop Drawings

Drawing Number	Revision	Description	Date Detailed/Revised
3546-BT1	2	Design Computations	12/13/2024
3546-D4	2	Design Drawing	12/12/2024
3546-D8	3	Design Drawing	12/12/2024
3546_OH-9_Shear_Fdn_Iss1		Document	12/11/2024
3546-E2	2	Erection Drawing	12/12/2024
3546-114		Shop Drawing	12/12/2024

This material is being transmitted for the purpose listed below:

For Approval

Remarks: Revised OH-9 Foundations

If enclosures are not as noted, please notify at once.

Walpar, LLC

Copy To: Engineering

By: _____

Brent Donelson

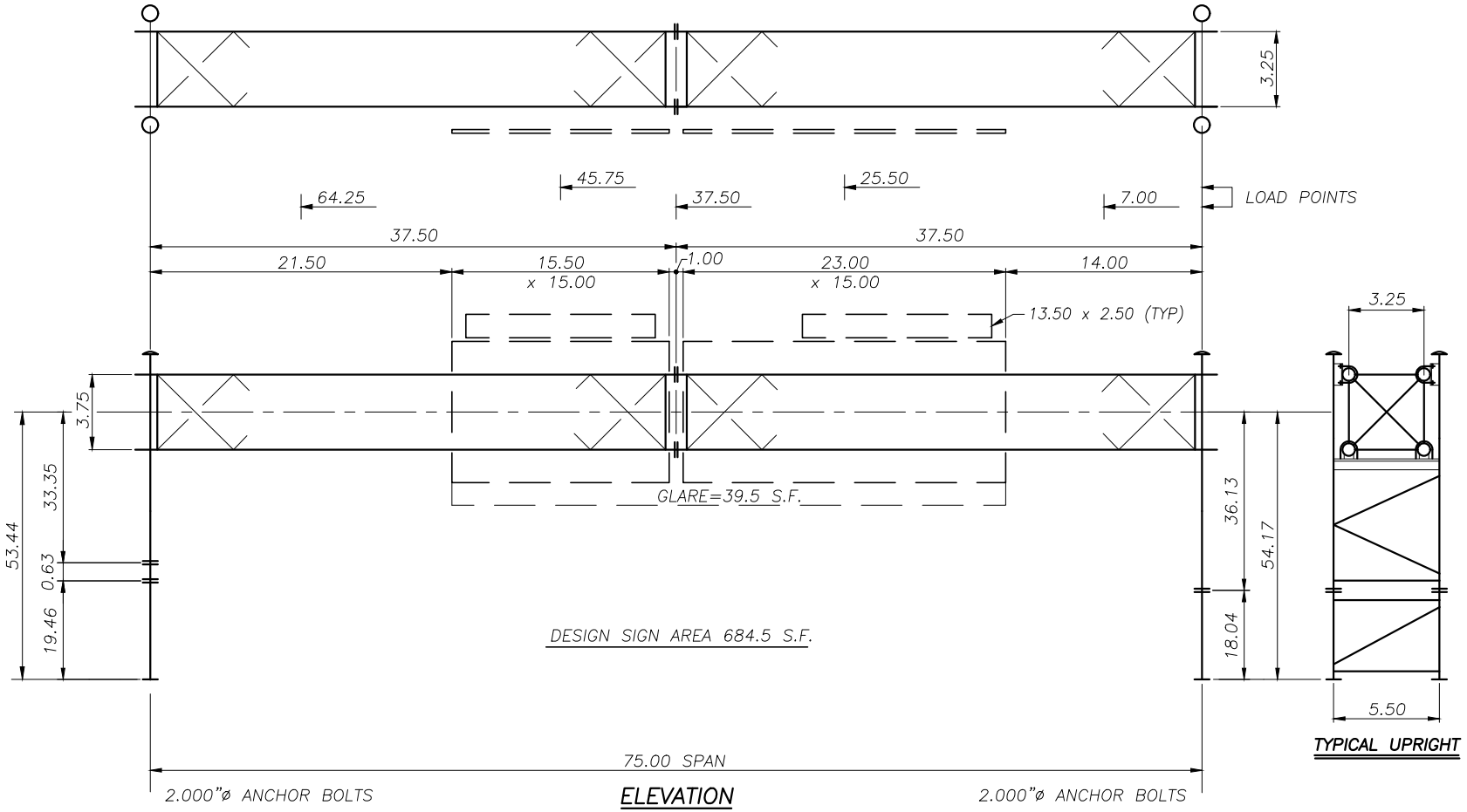

ELEVATION

STR NO: OH-9
STA NO: 7393+20.45 (WB)

TRUSS:	CHORDS	5.563 x 0.258
	VERT DIAGONALS	1.900 x 0.145
	HORIZ DIAGONALS	1.900 x 0.145
	STRUTS	1.660 x 0.140
	'NT DIAGONALS	1.660 x 0.140

UPRIGHTS:	LEFT POSTS	16.000 x 0.250
	STRUTS & DIAGONALS	4.500 x 0.188
	RIGHT POSTS	16.000 x 0.250
	STRUTS & DIAGONALS	4.500 x 0.188

SOUTH CAROLINA
LICENSED PROFESSIONAL ENGINEER
No. 35290
ROBERT R WIGINTON

Robert R Wiginton

Dec 13 2024

INFRASTRUCTURE CONSULTING & ENGINEERING

SHOP DRAWING REVIEW

REVIEW IS FOR GENERAL COMPLIANCE WITH CONTRACT DOCUMENTS. NO RESPONSIBILITY IS ASSUMED FOR CORRECTNESS OF DIMENSIONS OR DETAILS.

- APPROVED ☒
- APPROVED AS NOTED ☐
- REVISE AND RESUBMIT ☐
- REJECTED ☐

BY: PLC DATE: 1/14/25

WP walpar
A Valmont COMPANY

2

Subject Box Truss Design Information Sheet BT1
Job No C3546 By RRW Date 12/12/24
GROUP 1 Chk'd By --- Date ---

Box Truss Double Pole Structure Design

Reference Walpar Job Number C3546
Reference Design Information Sheet Number BT1 Structure : OH-9 Station : 7393+20.45 (WB)
State SC
AASHTO Specification 6th Edition Fatigue Category : II
Design Wind Velocity (V) 100 mph

Structure Dimensions

Span (S)	75.00 ft	Truss Hgt (U)	3.75 ft	Truss Depth (Y)	3.25 ft
Truss Section Length	38.50 ft			Coeff of Hgt (Kz)	1.13
Left Upright Hgt (H)	53.44 ft	Right Upright Hgt (H)	54.17 ft	Center to center of upright posts (Yu)	5.50 ft
Left Upright Splice Dist:	19.4583 ft	Right Upright Splice Dist:	18.0417 ft		

Sign Information **Design Sign Area: 684.50 sq ft** Z Ecc to bottom of Glare Screen

Sign	Load (i)	Lgth (B_i)	Hgt (D_i)	Location (a_i)	Unit Wgt	Depth	C_d	Front/Back	Z Ecc	Area	Exit Panel
1	2	23.00	15.00	25.50	7.00		1.14	F	8.50	402.3	X
2	4	15.50	15.00	45.75	7.00		1.13	F	8.50	282.3	X

Walkway Information

	Lgth	Location	Width	Unit wgt	Y Ecc
WW1	40.92	33.04	2.54	60	5.55

Load Summary Estimate for Field Use Only
(Distance from right end of assembled truss)

Weight of truss only	5922 lbs
Weight of erected signs & WW	5546 lbs
Center of erected sign & WW+truss load	37.39 ft
Front to Back Overturning on Truss	20519 ft-lbs
Max upright weight	6661 lbs
Max truss section weight	2978 lbs



Dec 13 2024

2

BT1 - 1 of 13

Walpar © 2014

Box Truss Double Pole Structure Design

Job No : C3546 Structure No : OH-9 Station : 7393+20.45 (WB)

Loads

Unit wind load on sign(s)/C_d: 32.98 psf Unit wind load on exposed truss: 39.57 psf Unit wgt of truss: 76.02 plf Unit ice wgt on truss: 27.17 plf

Truss Area for Wind Load (A_t): 1.42 sq ft / ft ***All loads in charts in lbs, ft or ft-lbs unless noted**

Truss Load Summary For Actual Sign & WW Condition

	Load (i)	Dead	Wind (W_p & W_h)	Ice
Sign and Truss Loads Ref: (BT1)	1	1064	789	380
	2	4564	15149	1832
	3	76	56	27
	4	3154	10509	1268
	5	1634	1212	584
WW Loads	WW1	2455	988	1092
Left Reaction (R_L)		6095	13136	2427
Right Reaction (R_R)		6853	15567	2756
Maximum Moments (M)		151373	371564	61610
Point of "0" shear (A_m)		36.07	35.59	35.99

** WW/EQ Loads are incorporated into Sign and Truss Loads to determine Reactions and Moments

Serviceability Requirements

Truss DL + IL Deflection	0.87 in
Limit for Deflection	6.00 in
Camber Used (Cu)	2.25 in
Permanent Camber (Cp)	1.63 in

SOUTH CAROLINA PROFESSIONAL ENGINEER
No. 35290
ROBERT R WIGINTON

Dec 13 2024

Post Loads

	Dead	Wind	Ice	Group II t_c	Group III t_c	Lateral Stiffness Ratio
Left Upright	6573	2971	1748	903	1354	0.51
Right Upright	6661	2992	1779	679	1018	0.49

Walpar © 2014

Box Truss Double Pole Structure Design

Job No : C3546 Structure No : OH-9 Station : 7393+20.45 (WB)

Load Combinations for Design Sign Area

Truss Member Loads	DL	DL +WL	DL+1/2 WL+IL
Truss Chords (Pc)	24930	82094	63819
Vertical Diagonals (Pv)	7723	8960	11275
Horizontal Diagonals (Ph)	2760	15575	10116
Vertical Struts (Psv)	5552	4316	5576
Horizontal Struts (Psh)	1842	10397	6753
Truss Moments			
Truss Chords (XMc)	1116	6141	3669

Upright Member Loads	Upright Loads					Web Member Loads	
Left Upright	M_N	M_{tc}	V_N	V_{tc}	Axial	Diagonals	Struts
Group II Comb. 1 (DL+WL)	785631	178802	16108	3773	12668	24905	17611
Group III Comb. 1 (DL+1/2WL+IL)	392816	89401	8054	1887	16843	12453	8805
Group II Comb. 2 (DL+WL)	471379	268202	9665	5660	12668	16279	11511
Group III Comb. 2 (DL+1/2WL+IL)	235689	134101	4832	2830	16843	8139	5755
Right Upright							
Group II Comb. 1 (DL+WL)	1013880	174837	18559	3549	13514	28787	20356
Group III Comb. 1 (DL+1/2WL+IL)	506940	87419	9279	1775	18050	14394	10178
Group II Comb. 2 (DL+WL)	608328	262256	11135	5324	13514	18365	12986
Group III Comb. 2 (DL+1/2WL+IL)	304164	131128	5568	2662	18050	9182	6493

Material Information

	Pipe Size (Min Yield)	Unbraced Length	CSR Group II	CSR Group III
Truss Chords	5.563 x 0.258 (52 ksi)	7.25 ft	0.85	0.61
Vertical Diagonals	1.900 x 0.145 (52 ksi)	5.22 ft	0.57	0.72
Vertical Struts	1.660 x 0.140 (52 ksi)	3.75 ft	0.26	0.34
Horizontal Diagonals	1.900 x 0.145 (52 ksi)	4.87 ft	0.90	0.58
Horizontal Struts	1.660 x 0.140 (52 ksi)	3.25 ft	0.56	0.36

	Pipe Size (Min Yield)	Unbraced Length	CSR (Comb. 1) Group II	CSR (Comb. 1) Group III	CSR (Comb. 2) Group II	CSR (Comb. 2) Group III
Left Upright Posts	16.000 x 0.250 (52 ksi)	51.33 ft	0.80	0.41	0.93	0.48
Left Upright Diagonals	4.500 x 0.188 (52 ksi)	5.80 ft	0.28	0.14	0.19	0.09
Left Upright Strut	4.500 x 0.188 (52 ksi)	4.17 ft	0.19	0.09	0.12	0.06
Right Upright Posts	16.000 x 0.250 (52 ksi)	52.06 ft	0.85	0.44	0.95	0.49
Right Upright Diagonals	4.500 x 0.188 (52 ksi)	5.83 ft	0.33	0.16	0.21	0.10
Right Upright Strut	4.500 x 0.188 (52 ksi)	4.17 ft	0.22	0.11	0.14	0.07



Dec 13 2024

2

BT1 - 3 of 13

Walpar © 2014

Box Truss Double Pole Structure Design

Job No : C3546 Structure No : OH-9 Station : 7393+20.45 (WB)

Structure Detail Information

Truss Chord Splices

Maximum Design Load at Splice	114778 lbs
Splice Moment (per inch of circum)	4105 in-lbs
Splice Bolt Circle	8.5 in.
Splice Bolt Qty & Size	6 - 7/8" ø A325
Splice Plate Thickness	1.0 in.
Splice Plate Weld	¼ fillet

Upright Detail

	Left	Right
Maximuim Anchor Bolt Pullout	73924 lbs	77569 lbs.
Anchor Bolt Spacing	16 in.	16 in.
Anchor Bolt Yield	55 ksi	55 ksi
Anchor Bolt Qty & Size (ea pole)	4 - 2" ø	4 - 2" ø
Anchor Bolt Length (Embed)	4.50 ft (3.5 ft)	4.50 ft (3.5 ft)
Anchor Bolt CSR	0.65	0.72
Base Plate Thickness	2 in.	2 in.
Base Plate Weld	5/16 fillet	5/16 fillet
Truss Seat	W8x24	W8x24
Truss Connection U-Bolts	½" ø	½" ø
Splice Moment (per inch of circum)	4794 in. lbs	4794 in. lbs
Splice Bolt Circle	19 in.	19 in.
Splice Bolt Qty & Size	14 - 1" ø A325	14 - 1" ø A325
Splice Plate Thickness	1.25 in.	1.25 in.
Splice Plate Weld	5/16 fillet	5/16 fillet

Sign Hanger Detail

Design hanger spacing 9.00 ft

Sign Hanger U-Bolt type ASTM-A307

SIGN	Max UBL at End	Max Spacing	Hanger U-Bolt	Sign Hanger	Hanger Support
1	5.15 ft	9.00 ft	2 - ½" ø	L5x3x5/16	W6x9
2	5.15 ft	9.00 ft	2 - ½" ø	L5x3x5/16	W6x9

Structure Input (For Foundation Designs)

	Left	Right
Truss DL React (Rd)	7.80 k	8.98 k
Upr DL React (Rv)	6.57 k	6.66 k
Truss WL React (Rh)	13.22 k	15.67 k
Upr WL React (Wv)	2.97 k	2.99 k
Distance To Rh (H1)	53.44 ft	54.17 ft
Distance To Wv (H2)	27.66 ft	28.02 ft
Min Ped Lgth (PL)	8.00 ft	8.00 ft
Min Ped Wth (PW)	2.50 ft	2.50 ft



Dec 13 2024

2

BT1 - 4 of 13

Walpar © 2014

Box Truss Double Pole Structure Design

Job No : C3546 Structure No : OH-9 Station : 7393+20.45 (WB)

Vibration and Fatigue (Per AASHTO 6th Edition)

Natural Wind Gust Load on Sign(s)/C_d	4.42 psf	Truck Induced Gust Load on Truss	12.40 psf
Natural Wind Gust Load on Truss	5.30 psf	Extent of Truck Induced Gust	12.00 ft
		Truss Area for Truck Induced Gust	1.39 sq ft / ft
		Location of Center of Truck Induced Gust	37.50 ft

Truck Induced Gust Loading

ID	P_{TG} (Uplift)	P_{TG} Torque	Location
Truss Chords	207		37.50
SIGN 1 (PARTIAL)			34.25
Walkway	1265	1873	37.50
Left Reaction	736		
Right Reaction	736		
Maximum Moments	25389		

Truss Load Summary for Natural Wind

LOADS (i)	$P_{NWG(i)}$
1	106
2	1912
3	8
4	1329
5	162
Left Reaction	1672 lbs
Right Reaction	1977 lbs
Maximum Moments	47108 ft-lbs

Load Combinations for Vibration and Fatigue

Truss Members	P_{NWG}	P_{TG}
Truss Chords	7247	3385
Vertical Diagonals		512
Horizontal Diagonals	740	
Vertical Struts		368
Horizontal Struts	494	
Upright Members		
Left Post	16241	368
Right Post	19470	368

Vibration and Fatigue Stresses

	NWG (ksi)	TIG (ksi)	Allowable (ksi)	
Truss Vertical Diagonals		0.64	1.20	
Truss Horizontal Diagonals	0.93		1.20	
Truss Vertical Struts		0.55	1.20	
Truss Horizontal Struts	0.74		1.20	
Truss chord at web members	0.48	0.79	4.50	
Upright Base Connection LT	1.31	0.03	2.60	Socket Connection Base Detail
Upright Base Connection RT	1.58	0.03	2.60	Socket Connection Base Detail
Anchor bolts - LT	1.62		7.00	
Anchor bolts - RT	1.95		7.00	



Dec 13 2024

2

BT1 - 5 of 13

Walpar © 2014

Box Truss Double Pole Structure Design

Job No : C3546 Structure No : OH-9 Station : 7393+20.45 (WB)

Left Foundation Design

Boring Type SPT Boring Designation IB 4-1
Major Soil Type Cohesionless Depth to Water 4.5 ft Surcharge (Frost) Depth 2 ft
Ground Slope 2.5:1 Consider slope stability? Y

SOIL TYPES	
01-GP	07-SM
02-GW	08-ML
03-GM	09-MH
04-GC	10-SC
05-SP	11-CL
06-SW	12-CH

Soil Properties

Depth	N Value	γ' (pcf)	Φ (deg)	S_u (lbf/ft^2)	α	β	f_{SN} (lbf/ft^2)	$(N_1)_{60}$	Soil Type
**0 - 4.5	5	103	30			0.42		10	07
4.5 - 11.5	1	41	23			0.07	69	2	07
11.5 - 15	50	100		4000	0.55		2200	50	09
15 - 35	50	65	36			0.93	1169	41	07

* Soil Type 13 indicates rock layer with N>60 for cohesionless soil or N>40 for cohesive soils
**Top 2.0 ft of soil will not contribute to load resistance.

Soil Bearing Capacity for Left Spread Footing Design

Footing width, B 12.00 ft
Footing length, L 23.00 ft
Eccentricity, e_L 4.15 ft
Eccentricity, e_B 0.91 ft
Effective ftg width, B' 10.18 ft
Effective ftg width, L' 14.70 ft

Total wgt of load, foundation and soil, Pt 190.04 k
Normal moment, ML 788.60 ft-k
Transverse moment, Mw 173.04 ft-k
Distance from ground to bottom of footing, d_{min} 2.60 ft
Distance from ground to bottom of footing, D_f 5.00 ft
Distance to ground water from bottom of ftg, z_w 1.90 ft
Overburden pressure at base of footing, q 0.39 ksf
Weighted average soil unit weight below pad, γ 62 pcf

Ultimate bearing capacity, q_{ult} 26.24 ksf
Allowable Bearing Capacity 9.00 ksf
Bearing Capacity used *** 2.00 ksf

***Note: Bearing capacities greater than 4.0 ksf will rarely effect spread footing pad size



Dec 13 2024

2

Walpar © 2014

Box Truss Double Pole Structure Design

Job No : C3546 Structure No : OH-9 Station : 7393+20.45 (WB)

Right Foundation Design

Boring Type SPT Boring Designation IB 3-5
Major Soil Type Cohesionless Depth to Water 4 ft Surcharge (Frost) Depth 2 ft
Ground Slope 2:1 Consider slope stability? Y

SOIL TYPES	
01-GP	07-SM
02-GW	08-ML
03-GM	09-MH
04-GC	10-SC
05-SP	11-CL
06-SW	12-CH

Soil Properties

Depth	N Value	γ' (pcf)	Φ (deg)	S_u (lbf/ft^2)	α	β	f_{SN} (lbf/ft^2)	$(N_1)_{60}$	Soil Type
**0 - 4	8	94		1000			140	16	09
4 - 12.5	1	46		125	0.55		46	2	11
12.5 - 15	50	100		4000	0.55		3116	48	09
15 - 35	50	65	36			0.91	1196	41	07

* Soil Type 13 indicates rock layer with N>60 for cohesionless soil or N>40 for cohesive soils
**Top 2.0 ft of soil will not contribute to load resistance.

Soil Bearing Capacity for Right Spread Footing Design

Footing width, B 12.00 ft
Footing length, L 25.00 ft
Eccentricity, e_L 3.65 ft
Eccentricity, e_B 0.79 ft
Effective ftg width, B' 10.42 ft
Effective ftg width, L' 17.69 ft

Total wgt of load, foundation and soil, Pt 255.35 k
Normal moment, ML 932.83 ft-k
Transverse moment, Mw 202.21 ft-k
Distance from ground to bottom of footing, d_{min} 3.25 ft
Distance from ground to bottom of footing, D_f 6.25 ft
Distance to ground water from bottom of ftg, z_w -2.25 ft
Overburden pressure at base of footing, q 0.41 ksf
Weighted average soil unit weight below pad, γ 62 pcf

Ultimate bearing capacity, q_{ult} 12.14 ksf
Allowable Bearing Capacity 4.00 ksf
Bearing Capacity used *** 2.00 ksf

***Note: Bearing capacities greater than 4.0 ksf will rarely effect spread footing pad size



Dec 13 2024

2

Walpar © 2014

Box Truss Double Pole Structure Design

Job No : C3546 Structure No : OH-9 Station : 7393+20.45 (WB)

Left Upright Spread Footing Design

Material/Soil Specifications and Safety Factors

Concrete f'_c :	4900 psi	Concrete wgt :	150 pcf
Rebar yield f_y :	60000 psi	Rebar F_s :	24000 psi
Soil Bearing Capacity :	2000 psf	Soil unit wgt :	110 pcf

Load Safety Factor[1] : 1.15

Loads and Locations From Structure

Truss DL React (Rd)	7.80 k	Base to Truss Load Dim (H1)	53.44 ft
Upright DL React (Rv)	6.57 k	Base to Upright Load Dim (H2)	27.66 ft
Truss WL React (Rh)	13.22 k	Total DL React (DL)	14.38 k
Upright WL React (Wv)	2.97 k	Transverse Wind Component (tc)	3.24 k

Loads at Top of Pedestal from Structure

Axial load (P)	14.38 k		
Moment (ML)	788.60 ft-k	Moment (Mw)	173.04 ft-k
Shear (VL)	16.19 k	Shear (Vw)	3.24 k

Final Spread Footing Design Sizes

Pad Length (L)	23.00 ft	Pedestal Width (PW)	2.50 ft
Pad Width (W)	12.00 ft	Pedestal Length (PL)	8.00 ft
Pad Thickness (T)	1.50 ft	Pedestal Projection at Ctr (PE)	1.50 ft
		Ground line to top of pad (PT)	3.50 ft

Reinforcement

Pad	Pedestal
Top each way - #4 Bars @ 12" o.c.	5 ea. - #8 Vert. Bars @ 5.50" o.c. @ Ends
X Direction - 12 - #9 Bars @ 12.00" o.c.	15 ea. - #8 Vert. Bars @ 5.50" o.c. @ Sides
Y Direction - 23 - #5 Bars @ 12" o.c.	6 - #4 Ties @ 12" max. o.c.

Serviceability

10.49% of footing in uplift

Safety factor against overturning = 12.38

Quantities

2414 lbs of reinforcement

19.04 cyd of concrete

Uncracked Section Calculations

Wgt of soil above pad (Ps)	98.56 k		
Wgt of concrete (Pc)	77.10 k	Total Area (A)	276.00 ft²
Total Load (Pt)	190.04 k		
X	11.50 ft	Y	6.00 ft
Ix	3312.00 ft⁴	Iy	12167.00 ft⁴
Mx	223.20 k-ft	My	1027.91 k-ft

Corner Stresses [Factored[1] (unfactored) loads]	
F1	2.06 ksf (1.88 ksf)
F2	1.26 ksf (1.18 ksf)
F3	-0.69 ksf (-0.51 ksf)
F4	0.12 ksf (0.20 ksf)

Cracked Section Calculations [Factored loads[1] (unfactored loads)]

A1	161.01 ft² (187.40 ft²)	L1	13.42 ft (15.62 ft)	W1	12.00 ft (12.00 ft)
A2	30.37 ft² (30.67 ft²)	L2	9.58 ft (7.38 ft)	W2	3.17 ft (4.15 ft)
A3	42.31 ft² (28.96 ft²)	L3	9.58 ft (7.38 ft)	W3	8.83 ft (7.85 ft)
A'	233.69 ft² (247.04 ft²)				
Xc	1.50 ft (1.06 ft)	X1	4.79 ft (3.69 ft)	Y1	0.00 ft (0.00 ft)
Yc	0.55 ft (0.40 ft)	X2	-6.71 ft (-7.81 ft)	Y2	4.42 ft (3.92 ft)
		X3	-5.11 ft (-6.58 ft)	Y3	-0.11 ft (-0.77 ft)
Ixc	2205.06 ft⁴ (2603.66 ft⁴)	X'	13.00 ft (12.56 ft)		
Iyc	8960.91 ft⁴ (9673.92 ft⁴)	Y'	6.55 ft (6.40 ft)		
Ixcyc	-1169.09 ft⁴ (-943.43 ft⁴)				
Mxc	118.04 ft-k (118.67 ft-k)				
Myc	742.16 ft-k (692.44 ft-k)				

Corner Stresses [Factored[1] (unfactored) loads]	
F1	2.55 ksf (2.12 ksf)
F2	1.29 ksf (1.23 ksf)
F3	-0.92 ksf (-0.58 ksf)
F4	0.33 ksf (0.31 ksf)



Dec 13 2024

2

BT1 - 8 of 13

Walpar © 2014

Box Truss Double Pole Structure Design

Job No : C3546 Structure No : OH-9 Station : 7393+20.45 (WB)

Left Upright Spread Footing Design (cont.)

Moment and Shear Calculation Results

LL	7.50 ft	WW	4.75 ft	S_{y0}	1.92 ksf	S_{x0}	1.44 ksf
L_{x1}	8.75 ft	W_{x1}	0.00 ft	S_{y1}	1.66 ksf	S_{x1}	1.44 ksf
L_{x2}	5.17 ft	W_{x2}	3.58 ft	S_{y2}	1.31 ksf	S_{x2}	1.07 ksf
L_{y1}	2.75 ft	W_{y1}	6.00 ft	S_{y3}	1.20 ksf	S_{x3}	0.94 ksf
L_{y2}	3.58 ft	W_{y2}	2.42 ft	Pcs	0.61 ksf		
				DTS_y	13.51 k/ft	DTS_x	3.11 k/ft
				M_{YY}	30.14 ft-k	M_{XX}	7.51 ft-k

Reinforcement Calculations

f_{cr} : 2606.8 psi v_{cr} : 88 psi n : 7.27

b : 12.00 in d : 14.00 in x : 5.25 in

About Y Axis		About X Axis	
p :	0.0055	p :	0.0018
k :	0.2457	k :	0.1492
j :	0.9181	j :	0.9503
f_{ca} :	1363 psi	f_{ca} :	540 psi
v_{ca} :	88 psi	v_{ca} :	19 psi
Mt :	660337 in-k	Mt :	164519 in-k
ld_r :	24.43 in	ld_r :	26.48 in
ld_a :	87.00 in	ld_a :	54.00 in
ld_{min} :	48.21 in	ld_{min} :	26.79 in
A_{sr} :	0.88 in²	A_{sr} :	0.21 in²
A_s Used :	1.00 in²	A_s Used :	0.31 in²

Tie Size : #4

Pedestal Calculations

V_1 : 16512 lbs V_2 : 0 lbs V_t : 16512 lbs

About Y Axis		About X Axis	
C_x :	48.00 in	C_y :	15.00 in
G_x :	88.00 in	G_y :	22.00 in
f_a :	4.99 psi	f_v :	522.52 psi
F_a :	2607 psi	F_v :	26334 psi
f_{bx} :	38.86 psi	f_{by} :	618.52 psi
F_{bx} :	2607 psi	F_{by} :	2607 psi
M_x :	189231 ft-lb	M_y :	869551 ft-lb
M_{ox} :	462308 ft-lb	M_{oy} :	1849232 ft-lb
I_x :	2804706 in⁴	I_y :	253054 in⁴
A_g :	2880 in²	A_{sm} :	28.80 in²
A_{st} :	31.60 in²	A_s :	7.90 in²
QTY :	40	A_b :	0.79 in²
X Sp'g :	5.50 in	Y Sp'g :	5.50 in
C_{sx} :	26.40 in	C_{sy} :	9.78 in
N qty :	15	R qty :	5
CSR :	0.25	CSM :	0.88



Sliding friction μ : 0.40

Factor of safety against sliding : 3.76

Dec 13 2024

2

BT1 - 9 of 13

Walpar © 2014

Box Truss Double Pole Structure Design

Job No : C3546 Structure No : OH-9 Station : 7393+20.45 (WB)

Right Upright Spread Footing Design

Material/Soil Specifications and Safety Factors

Concrete f'_c :	3000 psi	Concrete wgt :	150 pcf
Rebar yield f_y :	60000 psi	Rebar F_s :	24000 psi
Soil Bearing Capacity :	2000 psf	Soil unit wgt :	110 pcf

Load Safety Factor[1] : 1.15

Loads and Locations From Structure

Truss DL React (Rd)	8.98 k	Base to Truss Load Dim (H1)	54.17 ft
Upright DL React (Rv)	6.66 k	Base to Upright Load Dim (H2)	28.02 ft
Truss WL React (Rh)	15.67 k	Total DL React (DL)	15.64 k
Upright WL React (Wv)	2.99 k	Transverse Wind Component (tc)	3.73 k

Loads at Top of Pedestal from Structure

Axial load (P)	15.64 k		
Moment (ML)	932.83 ft-k	Moment (Mw)	202.21 ft-k
Shear (VL)	18.67 k	Shear (Vw)	3.73 k

Final Spread Footing Design Sizes

Pad Length (L)	25.00 ft	Pedestal Width (PW)	2.50 ft
Pad Width (W)	12.00 ft	Pedestal Length (PL)	8.75 ft
Pad Thickness (T)	2.00 ft	Pedestal Projection at Ctr (PE)	1.75 ft
		Ground line to top of pad (PT)	4.25 ft

Reinforcement

Pad	Pedestal
Top each way - #4 Bars @ 12" o.c.	5 ea. - #8 Vert. Bars @ 5.50" o.c. @ Ends
X Direction - 12 - #8 Bars @ 12.00" o.c.	15 ea. - #8 Vert. Bars @ 6.06" o.c. @ Sides
Y Direction - 25 - #4 Bars @ 12" o.c.	7 - #4 Ties @ 12" max. o.c.

Serviceability	Quantities
5.60% of footing in uplift	2409 lbs of reinforcement
Safety factor against overturning = 5.48	27.08 cyd of concrete

Uncracked Section Calculations

Wgt of soil above pad (Ps)	109.69 k		
Wgt of concrete (Pc)	130.02 k	Total Area (A)	300.00 ft²
Total Load (Pt)	255.35 k		
X	12.50 ft	Y	6.00 ft
Ix	3600.00 ft⁴	Iy	15625.00 ft⁴
Mx	266.89 k-ft	My	1244.47 k-ft

Corner Stresses [Factored[1] (unfactored) loads]

F1	2.29 ksf (2.10 ksf)
F2	1.40 ksf (1.33 ksf)
F3	-0.59 ksf (-0.40 ksf)
F4	0.30 ksf (0.37 ksf)

Cracked Section Calculations [Factored loads[1] (unfactored loads)]

A1	205.38 ft² (230.85 ft²)	L1	17.12 ft (19.24 ft)	W1	12.00 ft (12.00 ft)
A2	37.11 ft² (35.59 ft²)	L2	7.88 ft (5.76 ft)	W2	4.71 ft (6.18 ft)
A3	28.76 ft² (16.78 ft²)	L3	7.88 ft (5.76 ft)	W3	7.29 ft (5.82 ft)
A'	271.24 ft² (283.22 ft²)				
Xc	1.05 ft (0.63 ft)	X1	3.94 ft (2.88 ft)	Y1	0.00 ft (0.00 ft)
Yc	0.38 ft (0.24 ft)	X2	-8.56 ft (-9.62 ft)	Y2	3.65 ft (2.91 ft)
		X3	-7.24 ft (-8.66 ft)	Y3	-1.14 ft (-2.12 ft)
Ixc	2851.68 ft⁴ (3180.70 ft⁴)	X'	13.55 ft (13.13 ft)		
Iyc	12684.50 ft⁴ (13699.65 ft⁴)	Y'	6.38 ft (6.24 ft)		
Ixcyc	-1074.51 ft⁴ (-747.54 ft⁴)				
Mxc	170.28 ft-k (170.67 ft-k)				
Myc	977.23 ft-k (922.10 ft-k)				

Corner Stresses [Factored[1] (unfactored) loads]

F1	2.55 ksf (2.21 ksf)
F2	1.45 ksf (1.37 ksf)
F3	-0.67 ksf (-0.41 ksf)
F4	0.43 ksf (0.43 ksf)



Dec 13 2024

2

BT1 - 10 of 13

Walpar © 2014

Box Truss Double Pole Structure Design

Job No : C3546 Structure No : OH-9 Station : 7393+20.45 (WB)

Right Upright Spread Footing Design (cont.)

Moment and Shear Calculation Results

LL	8.13 ft	WW	4.75 ft	S_{y0}	2.00 ksf	S_{x0}	1.49 ksf
L_{x1}	9.13 ft	W_{x1}	0.00 ft	S_{y1}	1.72 ksf	S_{x1}	1.49 ksf
L_{x2}	6.04 ft	W_{x2}	3.08 ft	S_{y2}	1.45 ksf	S_{x2}	1.21 ksf
L_{y1}	3.38 ft	W_{y1}	6.00 ft	S_{y3}	1.31 ksf	S_{x3}	1.06 ksf
L_{y2}	3.08 ft	W_{y2}	2.92 ft	Pcs	0.77 ksf		
			0.00 ft	DTS_y	11.42 k/ft	DTS_x	2.25 k/ft
			0.00 ft	M_{YY}	33.15 ft-k	M_{XX}	6.53 ft-k

Reinforcement Calculations

f_{cr} : 1596 psi v_{cr} : 69 psi n : 9.29

b : 12.00 in d : 20.00 in x : 7.50 in

About Y Axis		About X Axis	
p :	0.0030	p :	0.0018
k :	0.2088	k :	0.1669
j :	0.9304	j :	0.9444
f_{ca} :	853 psi	f_{ca} :	207 psi
v_{ca} :	51 psi	v_{ca} :	10 psi
Mt :	726379 in-k	Mt :	143069 in-k
ld_r :	31.79 in	ld_r :	31.73 in
ld_a :	94.50 in	ld_a :	54.00 in
ld_{min} :	54.77 in	ld_{min} :	27.39 in
A_{sr} :	0.67 in²	A_{sr} :	0.13 in²
A_s Used :	0.79 in²	A_s Used :	0.20 in²

Tie Size : #4

Pedestal Calculations

V_1 : 19035 lbs V_2 : 0 lbs V_t : 19035 lbs

About Y Axis		About X Axis	
C_x :	52.50 in	C_y :	15.00 in
G_x :	97.00 in	G_y :	22.00 in
f_a :	4.97 psi	f_v :	602.39 psi
F_a :	1596 psi	F_v :	26334 psi
f_{bx} :	37.09 psi	f_{by} :	663.13 psi
F_{bx} :	1596 psi	F_{by} :	1596 psi
M_x :	224611 ft-lb	M_y :	1044821 ft-lb
M_{ox} :	462308 ft-lb	M_{oy} :	2038358 ft-lb
I_x :	3814664 in⁴	I_y :	283606 in⁴
A_g :	3150 in²	A_{sm} :	31.50 in²
A_{st} :	31.60 in²	A_s :	7.90 in²
QTY :	40	A_b :	0.79 in²
X Sp'g :	6.06 in	Y Sp'g :	5.50 in
C_{sx} :	29.10 in	C_{sy} :	9.78 in
N qty :	15	R qty :	5
CSR :	0.44	CSM :	1.00

Sliding friction μ : 0.40

Factor of safety against sliding : 4.38



Dec 13 2024

2

BT1 - 11 of 13

Walpar © 2014

Box Truss Double Pole Structure Design

Job No : C3546 Structure No : OH-9 Station : 7393+20.45 (WB)

Left Upright Cylindrical Footing Design

Concrete f'_c :	3000 psi	Concrete wgt :	150 pcf
Rebar yield f_y :	60000 psi	Min factor of safety for uplift :	1.00
Reinforcement Clear. :	4 in	Min factor of safety for lateral load :	2.86

Loads and Locations From Structure

Truss DL React (Rd)	7.80 k	Base to Truss Load Dim (H1)	53.44 ft
Upright DL React (Rv)	6.57 k	Base to Upright Load Dim (H2)	27.66 ft
Truss WL React (Rh)	13.22 k	Footing Projection at Ctr (H3)	1.50 ft
Upright WL React (Wv)	2.97 k	C/C of Cylinders (C)	5.50 ft

Normal Overturning Moment (M_{WL})	812.88 ft-k	Effective Hgt (H_{eff})	50.21 ft
Transverse Moment (M_{TL})	162.58 ft-k	Lateral Load (P_{eff})	8.39 k
Resultant Moment (M_R)	828.98 ft-k	Axial Force	10.78 k
Effective Overturning Moment	561.37 ft-k		

Final Cylindrical Footing Design Sizes

Req'd area of steel (A_s)	15.94 in²	Rebar Cage Dia (D1)	37.88 in
1% Cyl Area Min (A_m)	18.10 in²	Vertical bar spacing	6.26 in
Actual Reinf Area (A_p)	19.00 in²		

USE 48 in DIA x 22'- 0 CYLINDER
w/ 19- # 9 VERT. BARS & 23 - #4 HOOPS

Serviceability	Quantities
Calculated lateral safety factor = 7.3	3122 lbs of reinforcement
Calculated uplift safety factor = 1.8	20.48 cyd of concrete

Side Shear Results
(from Beta Method)

Cylinder Embedment	20.50 ft
Axial load	7.19 k
Uplift load	102.07 k
Weight of shaft	41.47 k
Side Resistance Capacity	187.48 k

Lateral Load Calculation Results
(from Brom's Method)

Soil friction angle Φ	22.2°
Soil unit weight γ	77 pcf
Average $(N_1)_{60}$ over eff depth (BPF)	37
Effective lateral load on cylinder	8.39 k
Effective moment on cylinder	421.03 ft-k
Axial thrust from moment and vertical loads	112.85 k
Rankine Passive Pressure Coeff. K_P	3.58
Ultimate soil resistance P_{ult}	216.62 k
Allowable soil resistance P_{max}	100.74 k
Ultimate soil moment capacity M_{ult}	3502 ft-k
Allowable soil moment capacity M_{max}	1629 ft-k
Ground line moment	434 ft-k
Dist. from GL to 0 shear point in cyl.	4.25 ft
Maximum moment in shaft	482 ft-k



Dec 13 2024

2

BT1 - 12 of 13

Walpar © 2014

Box Truss Double Pole Structure Design

Job No : C3546 Structure No : OH-9 Station : 7393+20.45 (WB)

Right Upright Cylindrical Footing Design

Concrete f'_c :	3000 psi	Concrete wgt :	150 pcf
Rebar yield f_y :	60000 psi	Min factor of safety for uplift :	1.00
Reinforcement Clear. :	4 in	Min factor of safety for lateral load :	2.86

Loads and Locations From Structure

Truss DL React (Rd)	8.98 k	Base to Truss Load Dim (H1)	54.17 ft
Upright DL React (Rv)	6.66 k	Base to Upright Load Dim (H2)	28.02 ft
Truss WL React (Rh)	15.67 k	Footing Projection at Ctr (H3)	1.75 ft
Upright WL React (Wv)	2.99 k	C/C of Cylinders (C)	5.50 ft

Normal Overturning Moment (M_{WL})	965.49 ft-k	Effective Hgt (H_{eff})	51.73 ft
Transverse Moment (M_{TL})	193.10 ft-k	Lateral Load (P_{eff})	9.89 k
Resultant Moment (M_R)	984.61 ft-k	Axial Force	11.73 k
Effective Overturning Moment	682.42 ft-k		

Final Cylindrical Footing Design Sizes

Req'd area of steel (A_s)	19.72 in²	Rebar Cage Dia (D1)	37.75 in
1% Cyl Area Min (A_m)	18.10 in²	Vertical bar spacing	7.41 in
Actual Reinf Area (A_p)	20.32 in²		

USE 48 in DIA x 25'- 0 CYLINDER
w/ 16- # 10 VERT. BARS & 26 - #4 HOOPS

Serviceability	Quantities
Calculated lateral safety factor = 6.7	3763 lbs of reinforcement
Calculated uplift safety factor = 1.6	23.27 cyd of concrete

Side Shear Results
(from Beta Method)

Cylinder Embedment	23.25 ft
Axial load	7.82 k
Uplift load	124.08 k
Weight of shaft	47.12 k
Side Resistance Capacity	197.65 k

Lateral Load Calculation Results
(from Brom's Method)

Soil friction angle Φ	9.0°
Soil unit weight γ	76 pcf
Average $(N_1)_{60}$ over eff. depth (BPF)	40
Effective lateral load on cylinder	9.89 k
Effective moment on cylinder	511.82 ft-k
Axial thrust from moment and vertical loads	135.81 k
Rankine Passive Pressure Coeff. K_P	2.73
Ultimate soil resistance P_{ult}	209.52 k
Allowable soil resistance P_{max}	97.43 k
Ultimate soil moment capacity M_{ult}	3999 ft-k
Allowable soil moment capacity M_{max}	1860 ft-k
Ground line moment	529 ft-k
Dist. from GL to 0 shear point in cyl.	4.81 ft
Maximum moment in shaft	594 ft-k



Dec 13 2024

2

BT1 - 13 of 13

Walpar © 2014

walpar
A valmont COMPANY

ENGINEERING
FABRICATING

December 12, 2024

Archer-United Joint Venture
1021 Briargate Cir
Columbia, SC 29210

Attn: Anderson Bowers

INFRASTRUCTURE CONSULTING & ENGINEERING
SHOP DRAWING REVIEW
REVIEW IS FOR GENERAL COMPLIANCE WITH CONTRACT DOCUMENTS. NO RESPONSIBILITY IS ASSUMED FOR CORRECTNESS OF DIMENSIONS OR DETAILS.
APPROVED [X]
APPROVED AS NOTED [ ]
REVISE AND RESUBMIT [ ]
REJECTED [ ]
BY: PLC DATE: 1/14/25

Project:	P039718
County:	Lexington & Richland
Walpar Job No:	C3546
Subject:	OH-9 Footing Review

Anderson,

This letter summarizes the findings from the design review of structure OH-9, specifically addressing the shear condition Vcr < Vca for the approved and installed spread foundations. The review was conducted using data provided by the concrete testing agency, which included the lowest 28-day break compressive strength f ′c (psi) of the concrete used for the foundation installation. The review focused on determining the required f ′c to ensure Vcr > Vca and compared this required value to the actual f ′c values obtained.

28-Day Break Information provided:

- OH-9L = 6600 psi.

OH-9L:

- The required f c for the installed foundation was 4900 psi, giving Vcr = 88.4 psi > Vca = 87.6 psi
- Based on the break f ‘c = 6600 psi on the installed concrete gives additional capacity of 25.8% remaining beyond required.

OH-9R:

- Not installed but re-designed to ensure Vcr > Vca.

Based on the findings from this review comparing the actual compressive strength f ′c to the required design strength f ′c, I believe that the structure would be acceptable as installed. I have included updated calculations that reflect the revised required f ′c design values.

Should you have any questions, please don’t hesitate to contact me.

Sincerely,

Robert R Wiginton

Robert R. Wiginton, PE, M.ACSE/SEA

SOUTH CAROLINA PROFESSIONAL ENGINEER
No. 35290
ROBERT R WIGINTON

Dec 12 2024

C3546-D4

STRUCTURE	STATION	SPAN	CHORDS	VERTICAL DIAGONAL	HORIZ DIAGONAL	STRUTS	CAMBER	ANCHOR BOLTS SIZE LT	ANCHOR BOLTS EMBED	ANCHOR BOLTS SIZE RT	ANCHOR BOLTS EMBED	LEFT UPRIGHT	RIGHT UPRIGHT	LEFT UPRIGHT DIAG & STRUT	RIGHT UPRIGHT DIAG & STRUT	SEAT	"A"	"B"	"C"	"D"	"E"	"F"	"G"	"H" LEFT	"H" RIGHT	CHORD SPLICE INFORMATION "J"	CHORD SPLICE INFORMATION "K"	CHORD SPLICE INFORMATION "L"	"M" LEFT	"M" RIGHT	"N" LEFT	"N" RIGHT	No OF SECTIONS	DESIGN SIGN AREA (ft²)
OH-9	7393+20.45 (WB)	75'-0	5.563 x .258	1.900 x .145	1.900 x .145	1.660 x .140	2¼	2	3'-6	2	3'-6	16.000 x .250	16.000 x .250	4.500 x .188	4.500 x .188	W8x24	53'-5¼	54'-2	5'-6	1'-1½	3'-9	3'-3	½	1'-4	1'-4	¼	1	6-⅞ø	2	2	5/16	5/16	2	684.5

△2

NOTE: ALL PIPE SIZES ARE OUTSIDE DIAMETER

OH-9 STUB SPLICE INFORMATION "TL1"	"U"	"V"	"W"	"X"
19'-5½	1¼	14	1	1'-7
"TR"	"U"	"V"	"W"	"X"
18'-0½	1¼	14	1	1'-7

△2

OH-9 POST EXT SPLICE INFORMATION "TL2"	"U"	"V"	"W"	"X"
7½	1¼	14	1	1'-7

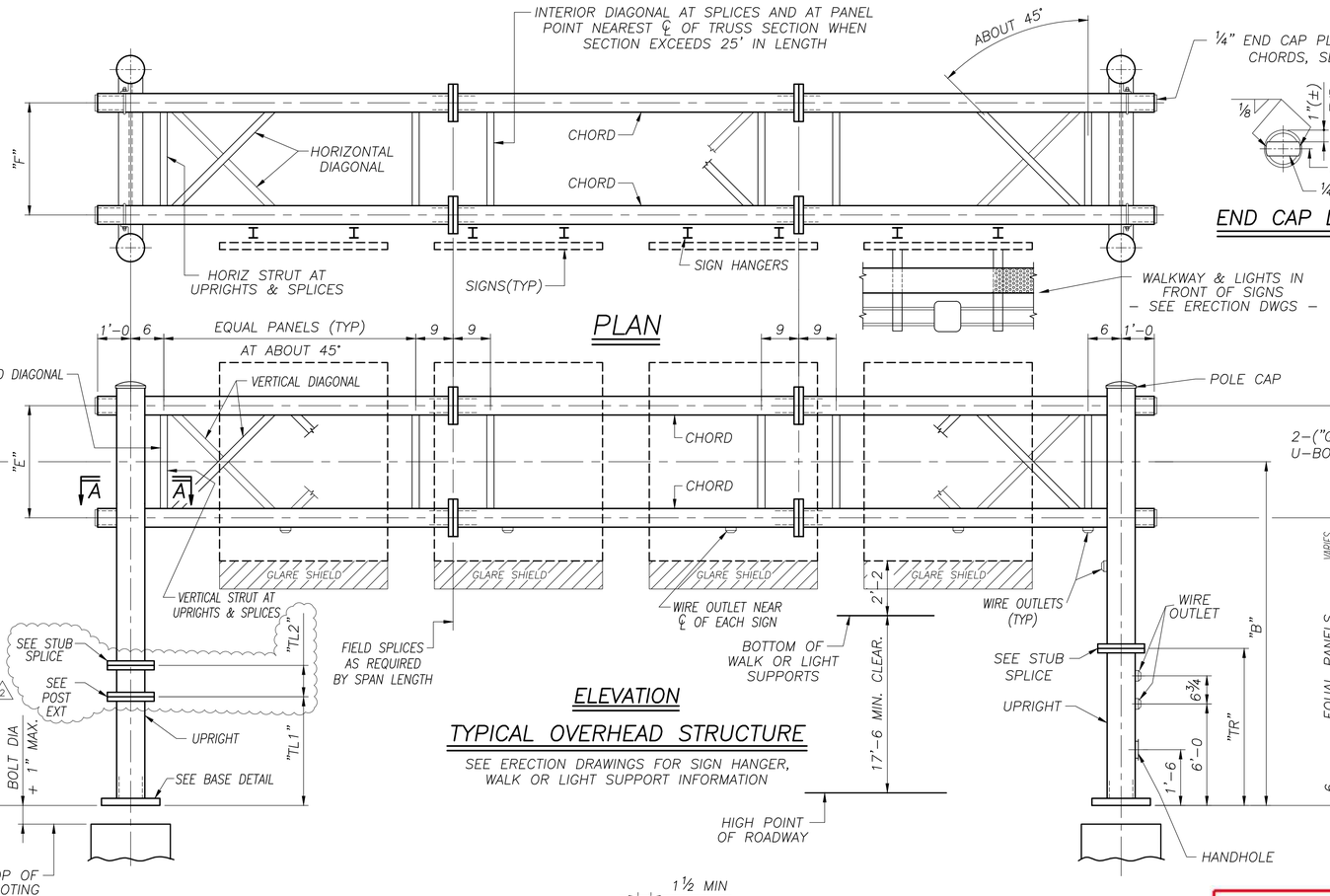

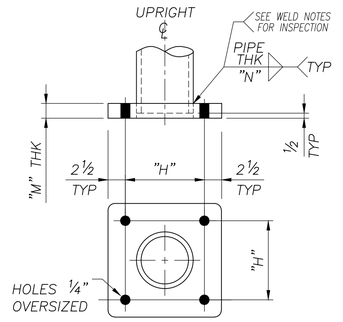

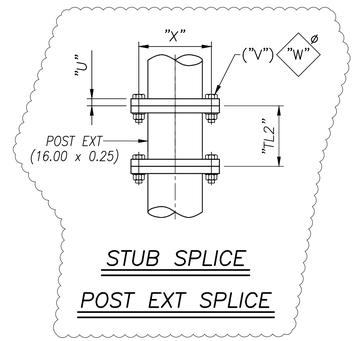

△2

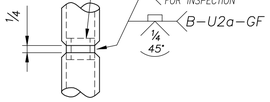

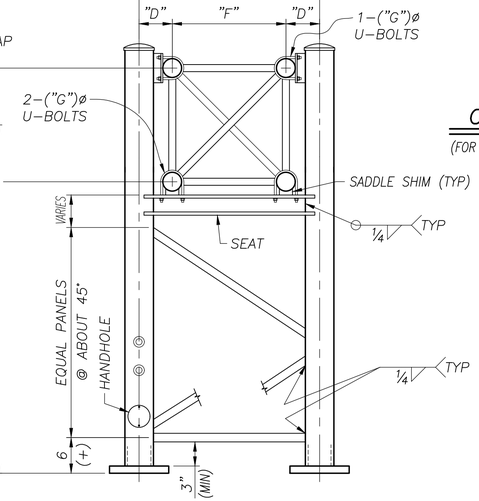

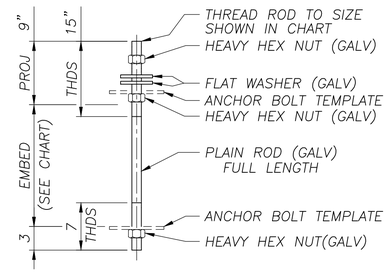

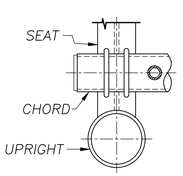

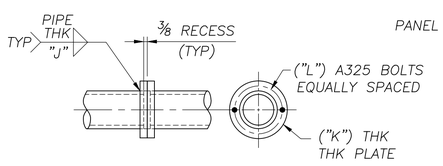

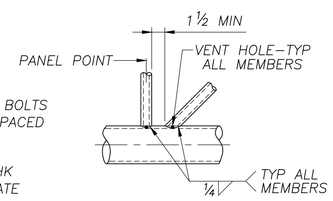

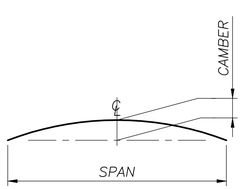

NOTE:
SEE GENERAL NOTES DRAWING FOR MATERIAL SPECIFICATIONS, FOUNDATION AND STANDARD NOTES

GROUP 1

AASHTO 6th Edition Spec's

INFRASTRUCTURE CONSULTING & ENGINEERING

SHOP DRAWING REVIEW

REVIEW IS FOR GENERAL COMPLIANCE WITH CONTRACT DOCUMENTS. NO RESPONSIBILITY IS ASSUMED FOR CORRECTNESS OF DIMENSIONS OR DETAILS.

APPROVED	[X]
APPROVED AS NOTED	[ ]
REVISE AND RESUBMIT	[ ]
REJECTED	[ ]

BY: PLC DATE: 1/14/25

SEALED BY:

SOUTH CAROLINA PROFESSIONAL ENGINEER No. 35290 ROBERT R WIGINTON

Dec 13 2024

STAMP APPLIES TO DWG REVISED TO REMOVE STR OH-23 ONLY AND REVISE OH-9 FOR EXT. STR ORIGINALLY SEAL BY DAVID LALLONE LIC# 38665 ON SEPTEMBER 08, 2023, REV 0 OF THIS DRAWINGS

walpar
A valmont COMPANY
POST OFFICE BOX 28650
BIRMINGHAM ALABAMA 35228
4200 JEFFERSON AVENUE
BIRMINGHAM ALABAMA 35221
PHONE (205)-925-4990
FAX (205) 925-7273

△2

STATE:	South Carolina
FED PROJ:	Carolina Crossroads Phase 1 & 2
ST PROJ:	P039718
COUNTY:	Lexington & Richland
ROUTE:	I-26 & I-126
SUBJECT:	OVERHEAD SIGN SUPPORT DESIGN
	WALPAR STD BOX TRUSS DESIGN
FOR:	Archer-United Joint Venture
DRAWN BY:	IWL DATE: 7/19/23
CHECKED BY:	DAL DATE: 8/29/23
DWG NO:	C3546-D4

NO:	REVISIONS	DATE	MADE	CHECKED
△2	REVISED OD-9 TO POST EXT FOR AS BUILT ELEVATIONS	12/12/24	---	RRW

STRUCTURE	STATION	CONC/FTG (yds[3])	REINF/FTG (lbs)	"A"	"B"	"C"	"D"	"E"	"F"	"G"	"H"	"J"	"K"	"L"	"M"	"N"	"P"	"R"	"S"	"T"	"U"	"V"	"W"	"X"	"Z"
OH–9(L)	7393+20.45 (WB)	19.04	2414	23'–0	12'–0	5'–6	8'–0	1'–3	7'–6	2'–6	4'–9	5'–0	1'–6	6'–6	40	15	8	5	7	23	5	12	9	1'–0	1'–6
OH–9(R)	7393+20.45 (WB)	27.08	2997	25'–0	12'–0	5'–6	8'–9	1'–7½	8'–1½	2'–6	4'–9	6'–0	2'–0	8'–0	40	15	8	5	7	25	5	12	10	1'–0	1'–9
OH–11(R)	412+69.92 (EB)	11.63	1202	17'–0	9'–0	5'–3	7'–6	1'–1½	4'–9	2'–3	3'–4½	5'–0	1'–6	6'–6	32	12	8	4	6	17	4	9	6	1'–0	1'–6
OH–14(R)	428+79.25 (EB)	16.27	1776	21'–0	11'–0	5'–3	7'–6	1'–1½	6'–9	2'–3	4'–4½	5'–6	1'–6	7'–0	32	12	8	4	6	21	4	11	8	1'–0	1'–6

△3

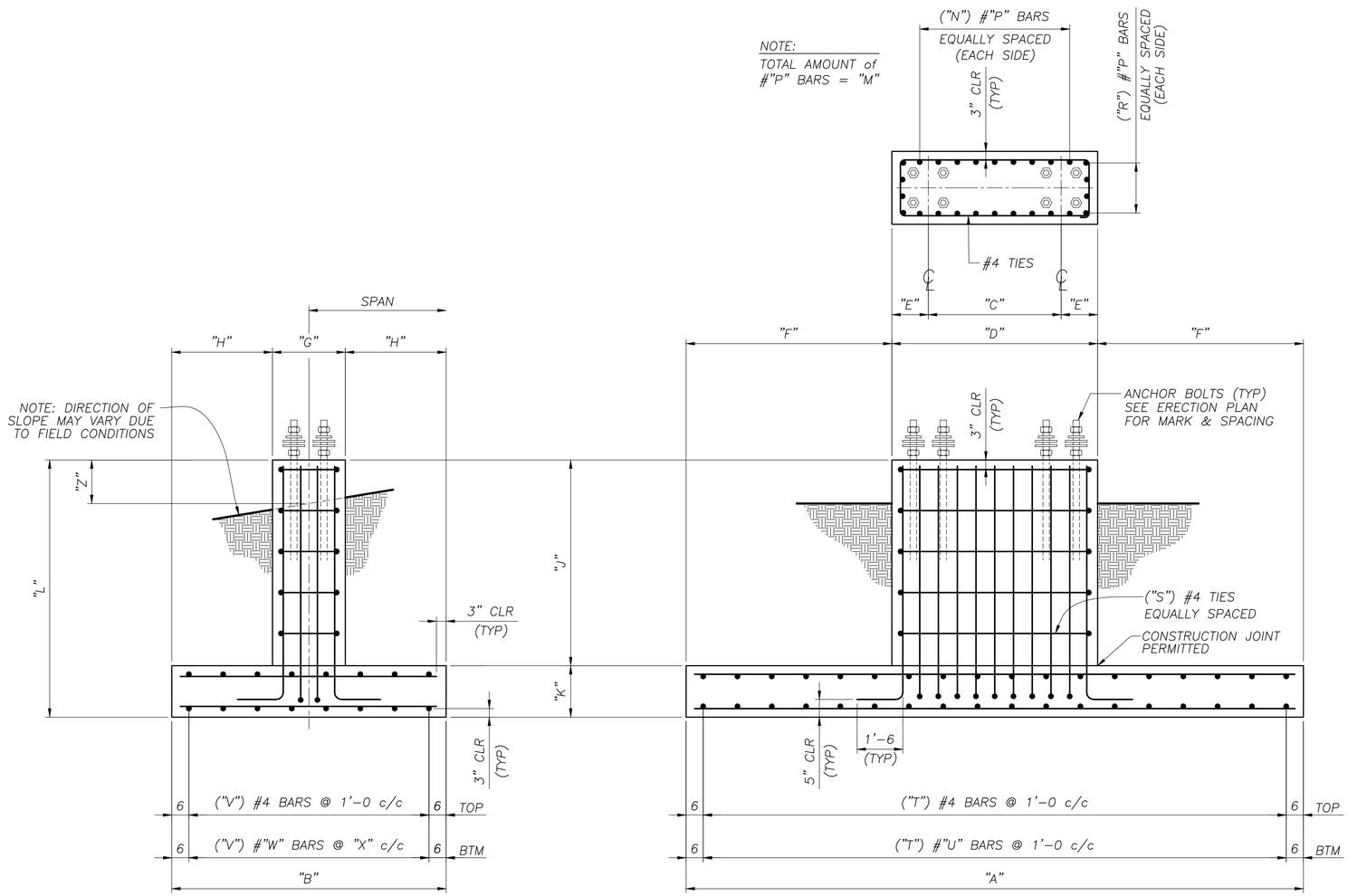

NOTE:
TOTAL AMOUNT of #"P" BARS = "M"

END VIEW

SIDE VIEW
(PARALLEL TO ROADWAY)

INFRASTRUCTURE CONSULTING & ENGINEERING

SHOP DRAWING REVIEW

REVIEW IS FOR GENERAL COMPLIANCE WITH CONTRACT DOCUMENTS. NO RESPONSIBILITY IS ASSUMED FOR CORRECTNESS OF DIMENSIONS OR DETAILS.

APPROVED	[X]
APPROVED AS NOTED	[ ]
REVISE AND RESUBMIT	[ ]
REJECTED	[ ]

BY: PLC DATE: 1/14/25

NOTE:
SEE GENERAL NOTES DRAWING FOR MATERIAL SPECIFICATIONS, FOUNDATION AND STANDARD NOTES

GROUP 1

AASHTO 6th Edition Spec's

SEALED BY:

SOUTH CAROLINA PROFESSIONAL ENGINEER
Robert R Wigington
No. 35290
ROBERT R WIGINGTON

Dec 13 2024

STAMP APPLIES TO CHGS ON OH–9 AND REMOVAL OF OH–23 REV 1 ONLY. ALL OTHER FTG DESIGNS OH–11 & OH–14 STAMPED BY DAVID LALLONE LIC# 38665 ON SEPT 08, 2023, REV 0 OF THIS DRAWINGS.

walpar
A valmont COMPANY
POST OFFICE BOX 28650
BIRMINGHAM ALABAMA 35228
4200 JEFFERSON AVENUE
BIRMINGHAM ALABAMA 35221
PHONE (205)–925–4990
FAX (205) 925–7273

△3

STATE:	South Carolina
FED PROJ:	Carolina Crossroads Phase 1 & 2
ST PROJ:	P039718
COUNTY:	Lexington & Richland
ROUTE:	I–26 & I–126
SUBJECT:	OVERHEAD SIGN SUPPORT
	SPREAD FOOTING DRAWING
FOR:	Archer–United Joint Venture
DRAWN BY:	IWL DATE: 7/19/23
CHECKED BY:	DAL DATE: 8/21/23
DWG NO:	C3546–D8

NO:	REVISIONS	DATE	MADE	CHECKED
3	REVISED OH–9R FOR SHEAR	12/12/24	---	RRW

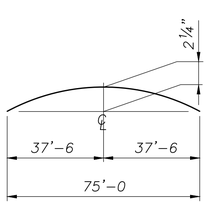

CAMBER DIAGRAM

(PERMANENT CAMBER = 1⅝")

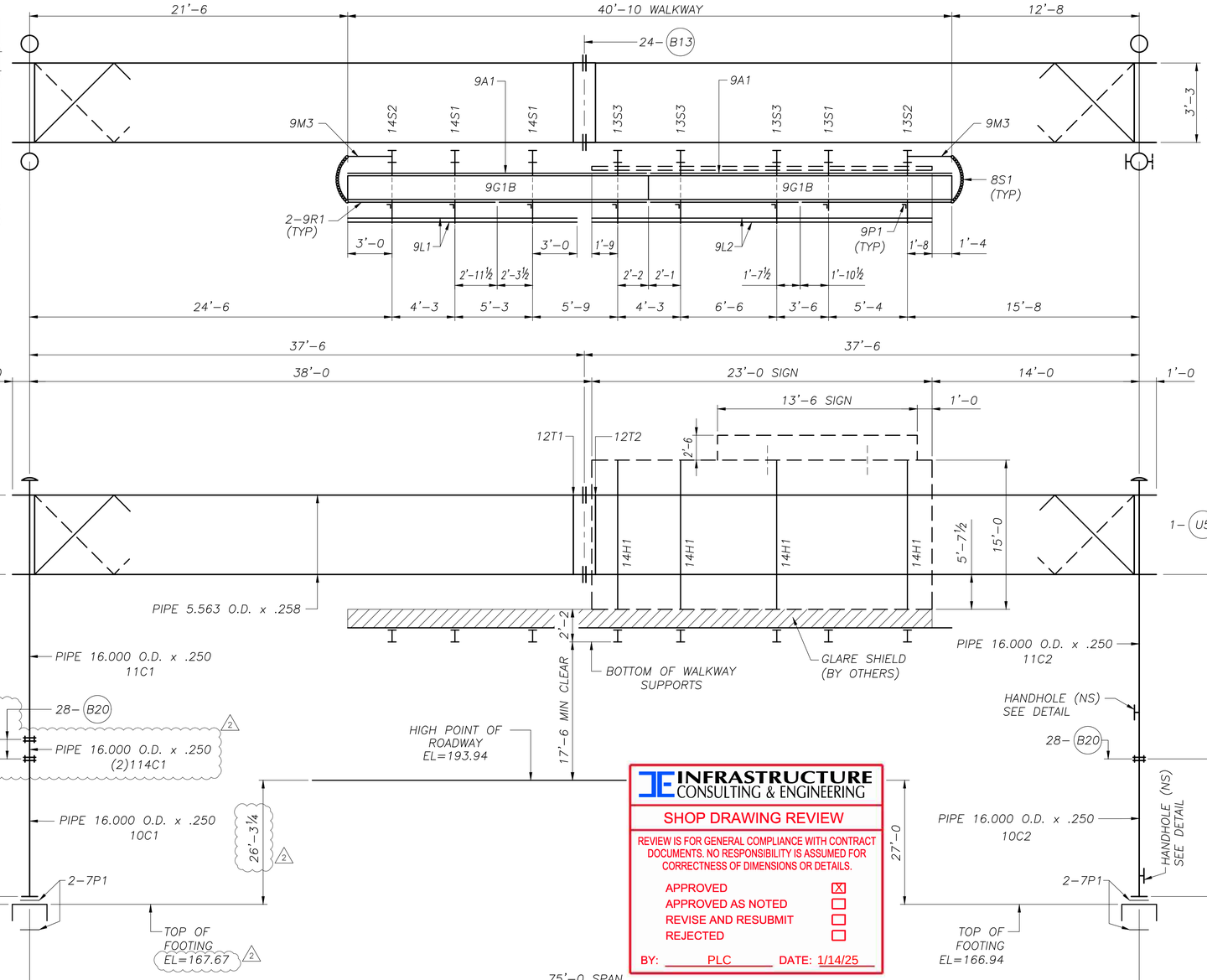

ELEVATION

STR NO: OH–9

STA NO: 7393+20.45 (WB)

(LOOKING IN DIRECTION OF TRAFFIC FLOW)

NOTE: STRUCTURE SHALL NOT BE ERECTED WITHOUT SIGNS, SIGN HGR'S OR A SUITABLE VIBRATION DAMPER

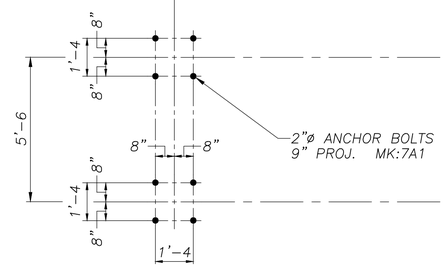

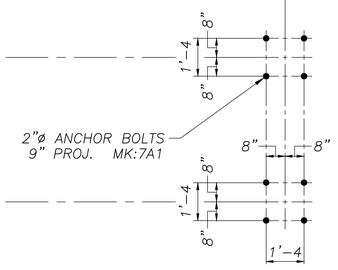

ANCHOR BOLT PLAN

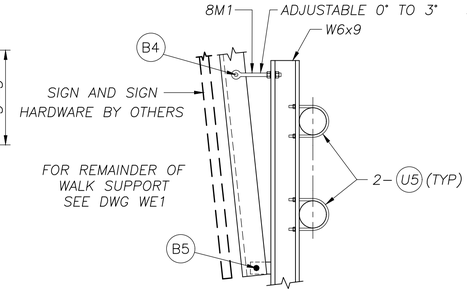

TYP SECTION THRU SIGN SUPPORT & SIGN HANGER

NOTE: EXIT PANELS & SUPPORTS BY OTHERS

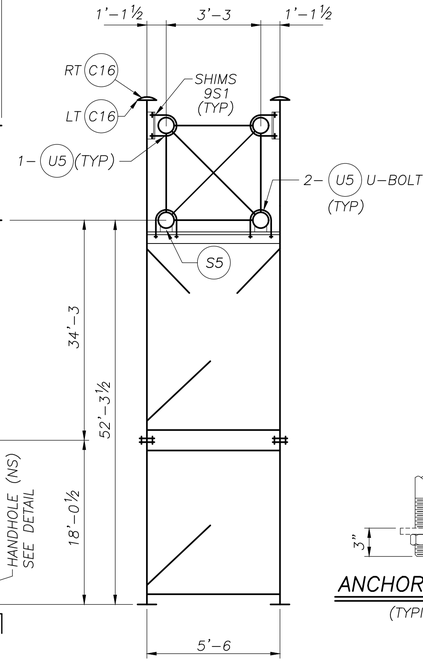

TYPICAL UPRIGHT

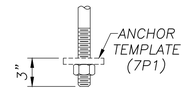

ANCHOR DETAIL

(TYPICAL)

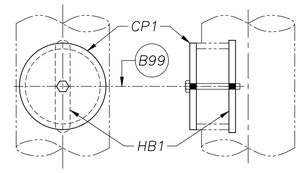

HANDHOLE DETAIL

PRE ASSEMBLE CP1 TO HB1 WITH B99 BOLT. DISTURB THREADS SO HB1 CAN NOT BE REMOVED. INSTALL COVER ASSEMBLY INTO HANDHOLE OPENING AND TIGHTEN BOLT TO SECURE.

SHIPPING LIST		C3546–E2
QTY	MARK	DESCRIPTION
16	7A1	ANCHOR BOLTS
8	7P1	ANCHOR TEMPLATES
1	12T1	BOX TRUSS 4.2' x 4.7' x 38.6'
1	12T2	BOX TRUSS 4.2' x 4.7' x 38.6'
1	11C1	UPRIGHT 7.4' x 1.8' x 35.9'
1	11C2	UPRIGHT 7.4' x 1.8' x 38.7'
1	10C1	UPRIGHT STUB 7.4' x 1.8' x 19.5'
1	10C2	UPRIGHT STUB 7.4' x 1.8' x 18.1'
2	9M3	SAFETY CHAIN SUPPORT
2	8S1	SAFETY CHAIN
8	8P1	HINGE PIN ASSEMBLIES
16	9M1	CLAMP PLATES
8	9P1	HANDRAIL POSTS
8	9R1	HANDRAILS
2	9M2	SPLICE PLATES
2	9G1B	GRATING
4	9S1	SHIMS
1	13S1	WALK SUPPORTS
1	13S2	SIGN/WALK/LIGHT SUPPORTS
3	13S3	SIGN/WALK/LIGHT SUPPORTS
2	14S1	WALK & LIGHT SUPPORT
1	14S2	WALK & LIGHT SUPPORT
4	14H1	SIGN HANGERS (ANGLE ARM)
4	8M1	EYEBOLT ASSEMBLIES
2	9L1	LIGHT SUPPORTS
2	9L2	LIGHT SUPPORTS
2	CP1	COVER PLATE ASSEMBLY
2	HB1	HANDHOLE BAR
2	9A1	SAFETY ANGLE
42	B1	3/8" x 1 1/4" BOLT w/HN/LW (A307 GALV)
16	B3	1 3/8" OD x 14 GA WASHER (A307 GALV)
4	B4	3/4" x 2 1/2" HHB w/HN/FW/LW (A325 GALV)
4	B5	3/4" x 2" HHB w/HN/LW (A325 GALV)
8	B6	1/2" x 1 1/2" HHB w/HN/LW (A325 GALV)
24	B13	7/8" x 3 1/2" HHB w/HN/FW/DTI (A325 GALV)
56	B20	1" x 4 1/4" HHB w/HN/FW/DTI (A325 GALV)
2	B99	1/4" x 4" HHB (A307 GALV)
4	C16	POLE CAPS #393 w/ (2) 1/2" SET SCRS(S.S.)
4	S5	SADDLE SHIMS #359
16	U1	5/16" U-Bolts w/(2 ea) HN/LW (ZINC PL)
44	U5	1/2" U-Bolts w/(2 ea) HN/LW/FW (GALV)
2	114C1	UPRIGHT EXTENSIONS 1.8' x 1.8' x 0.7'
28	B20	1" x 4 1/4" HHB w/HN/FW/DTI (A325 GALV)

2

PREVIOUSLY SHIPPED

INFRASTRUCTURE CONSULTING & ENGINEERING

SHOP DRAWING REVIEW

REVIEW IS FOR GENERAL COMPLIANCE WITH CONTRACT DOCUMENTS. NO RESPONSIBILITY IS ASSUMED FOR CORRECTNESS OF DIMENSIONS OR DETAILS.

APPROVED [X]
APPROVED AS NOTED [ ]
REVISE AND RESUBMIT [ ]
REJECTED [ ]

BY: PLC DATE: 1/14/25

NOTE:

SEE GENERAL NOTES DRAWING FOR MATERIAL SPECIFICATIONS, FOUNDATION AND STANDARD NOTES

DESIGN DWGS: D4, D6, D8 DESIGN NO: BT1 AASHTO 6th Edition Spec's

OH–9

SEALED BY:

SOUTH CAROLINA REGISTERED PROFESSIONAL ENGINEER No. 35290 ROBERT R WIGINTON

Dec 13 2024

STAMP APPLIES ONLY TO REVISE OH–9 FOR UPRIGHT EXTENSION. THIS DRAWING ORIGINALLY SEALED BY DAVID LALLONE LIC# 38665 ON JANUARY 18, 2024, REV 1.

walpar A valmont COMPANY

POST OFFICE BOX 28650
BIRMINGHAM ALABAMA 35228
4200 JEFFERSON AVENUE
BIRMINGHAM ALABAMA 35221
PHONE (205)–925–4990
FAX (205) 925–7273

NO:	REVISIONS	DATE	MADE	CHECKED
2	ADD UPRIGHT EXTENSION DUE TO TOF ELEVATION CHANGE	12/12/24	---	JSD

STATE:	South Carolina
FED PROJ:	Carolina Crossroads Phase 1 & 2
ST PROJ:	P039718
COUNTY:	Lexington & Richland
ROUTE:	I–26 & I–126
SUBJECT:	OVERHEAD BOX TRUSS STRUCTURE ERECTION DRAWING
FOR:	Archer–United Joint Venture
DRAWN BY:	DLK DATE: 8/25/23
CHECKED BY:	DLJ DATE: 8/30/23
DWG NO:	C3546–E2

BT–E

NAME: E:\acad\JobsNPrg\3546\3546–E2.dwg DATE: DEC 12, 2024 TIME: 4:56 PM jd706288

C3546–114

PARTS PER CONT	PART MARK NO	NO. OF PIECES REQ'D	SECTION SYM	DESCRIPTION OF MATERIAL	LENGTH FEET	LENGTH INCHES	PARTS FOR ONE UNIT	
	114C1	2		UPRIGHT EXTENSIONS				
	a	2	PIPE	16.000 x .250	0	6½		
	h	4	PL	1¼ x 22 DIA.	–	–		

SHIPPING LIST		
QTY	MARK	DESCRIPTION
2	114C1	UPRIGHT EXTENSIONS 1.8' x 1.8' x 0.7'
28	B20	1" x 4 1/4" HHB w/HN/FW/DTI (A325 GALV)

NOTE: SHOP SHIP FROM THIS DRAWING

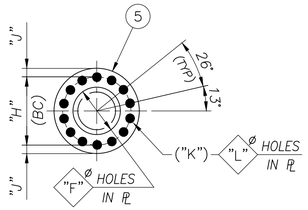

SECTION A–A

MARK	QTY	"A"	"F"	"G"	"H"	"J"	"K"	"L"	1	5
114C1	1	7½"	1'–4 1/16	5/16	1'–7	1½	14	1⅛	a	h

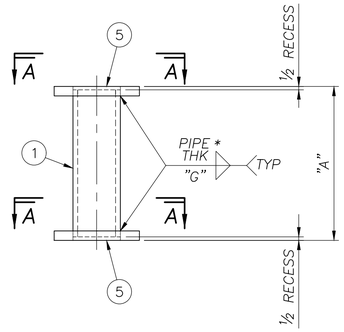

UPRIGHT EXTENSION

INFRASTRUCTURE CONSULTING & ENGINEERING

SHOP DRAWING REVIEW

REVIEW IS FOR GENERAL COMPLIANCE WITH CONTRACT DOCUMENTS. NO RESPONSIBILITY IS ASSUMED FOR CORRECTNESS OF DIMENSIONS OR DETAILS.

APPROVED	[X]
APPROVED AS NOTED	[ ]
REVISE AND RESUBMIT	[ ]
REJECTED	[ ]

BY: PLC DATE: 1/14/25

NOTE:
SEE GENERAL NOTES DRAWING FOR MATERIAL SPECIFICATIONS, FOUNDATION AND STANDARD NOTES

REF DWG: E2

OH–9

AASHTO 6th Edition Spec's

SEALED BY:

SOUTH CAROLINA PROFESSIONAL ENGINEER No. 35290 ROBERT R WIGINTON

Dec 13 2024

walpar
A valmont COMPANY
POST OFFICE BOX 28650
BIRMINGHAM ALABAMA 35228
4200 JEFFERSON AVENUE
BIRMINGHAM ALABAMA 35221
PHONE (205)–925–4990
FAX (205) 925–7273

STATE:	South Carolina
FED PROJ:	Carolina Crossroads Phase 1 & 2
ST PROJ:	P039718
COUNTY:	Lexington & Richland
ROUTE:	I–26 & I–126
SUBJECT:	OVERHEAD SIGN SUPPORT
	DETAIL OF UPRIGHT EXTENSION
FOR:	Archer–United Joint Venture
DRAWN BY:	JSD DATE: 12/12/24
CHECKED BY:	JSD DATE: 12/12/24
DWG NO:	C3546–114

NO:	REVISIONS	DATE	MADE	CHECKED
0	CHECK COMPLETE	12/12/24	---	JSD

NONE

NAME: E:\acad\JobsNPrg\3546\3546–114.dwg DATE: DEC 12, 2024 TIME: 4:54 PM jd706288